leicht entwässern.

# Technical drawing
# Sita**Trendy** screw-on flange angled DN 100

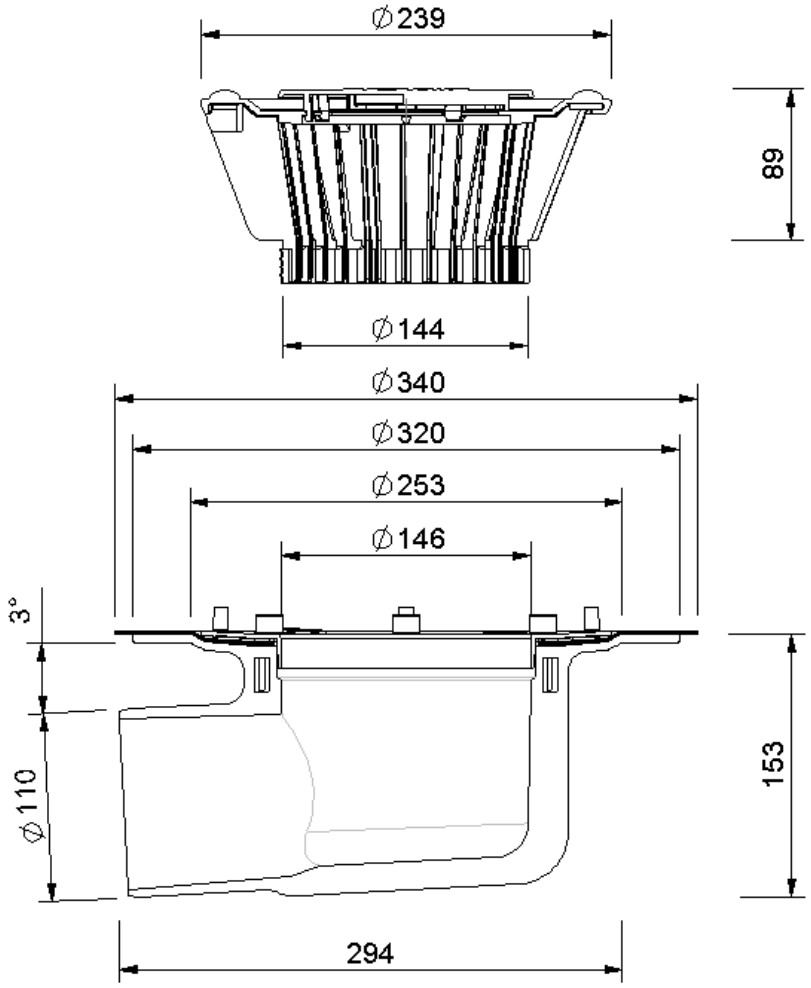


SitaTrendy screw-on flange angled DN 100, with Screw-on flange heated

Article number

151799

Changes possible due to technical development, subject to mistakes and printing errors.

Sita Bauelemente GmbH * Ferdinand-Braun-Strasse 1 * 33378 Rheda-Wiedenbrück, Germany * Tel +49 2522 8340-0 * Fax +49 2522 8340-100 * info@sita-bau-elemente.de * www.sita-bauelemente.de